DIM.	IOL
L≤10	±0.2
10<L≤30	±0.3
30<L≤50	±0.5
50<L≤100	±0.7
100<L≤250	±1.2
ABOVE 250	±1.5

REVISIONS			
REV	DESCRIPTION	DATE	BY

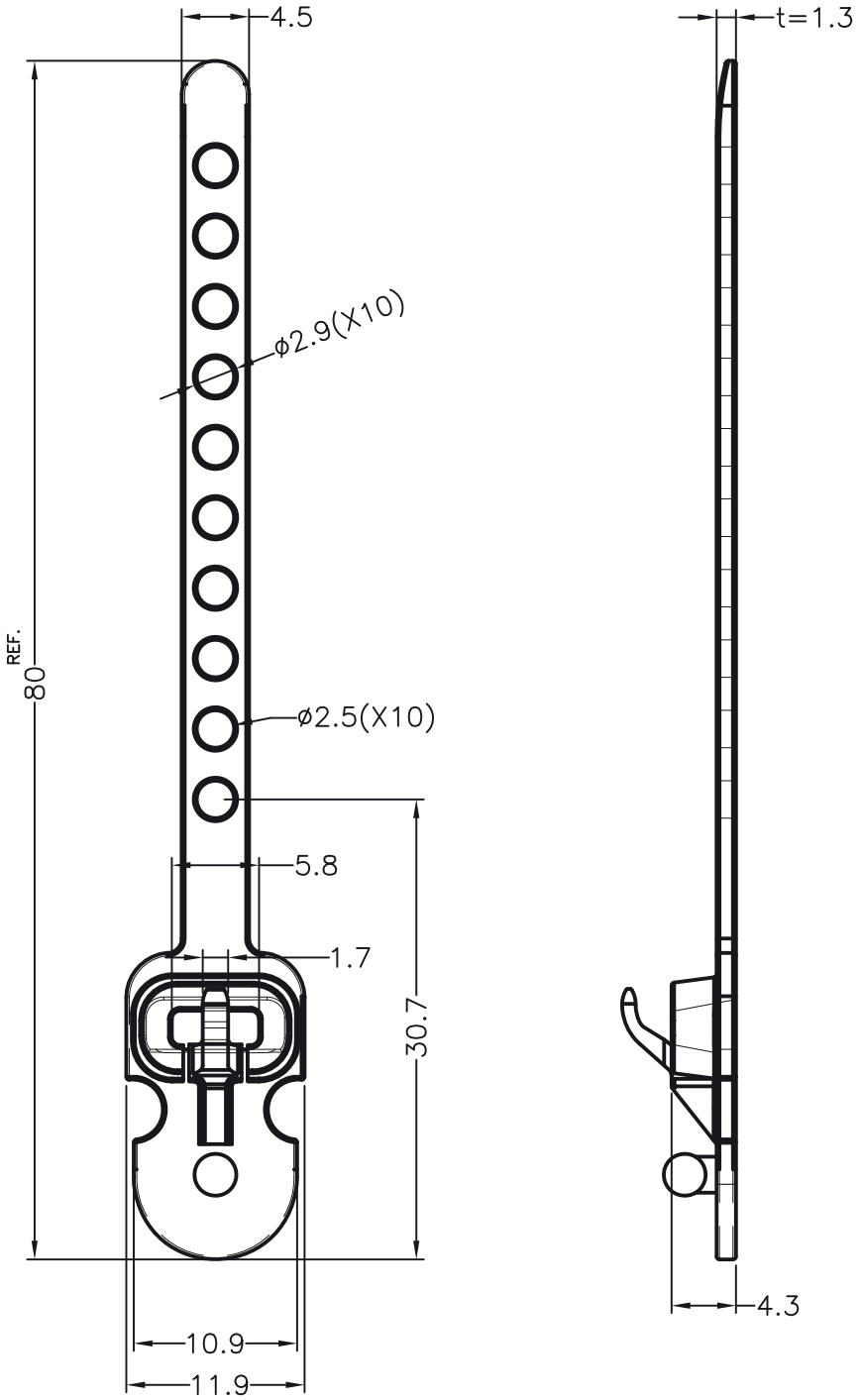

fastpoint

TITLE	STRAP TIES		
MATERIAL	TPE	DATE	17/05/2011
FINISH		DRAWN	J.D.
COLOR	BLUE	CHECK	
UNLESS OTHERWISE SPECIFIED TOLERANCE	SEE ABOVE	APPROVED	

PART NUMBER	DRAWING NUMBER		
10736PS08	11.05.17.10736.0.E		
SIZE A4	SCALE 2:1	UNIT mm.	REV C