DIMENSION	TOLERANCE
L≦4	±0.10
4＜L≦15	±0.20
15＜L≦50	±0.30
50＜L≦100	±0.40

REVISIONS			
REV	DESCRIPTION	DATE	BY

Body

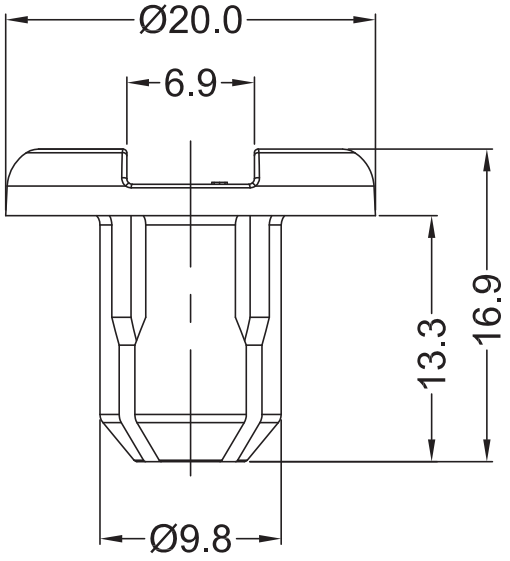

Pin

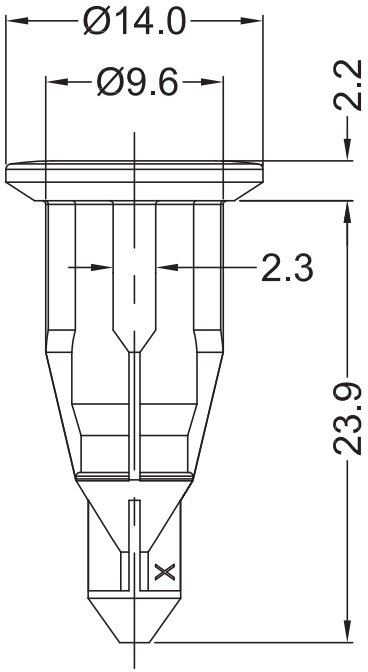

Assembly Part

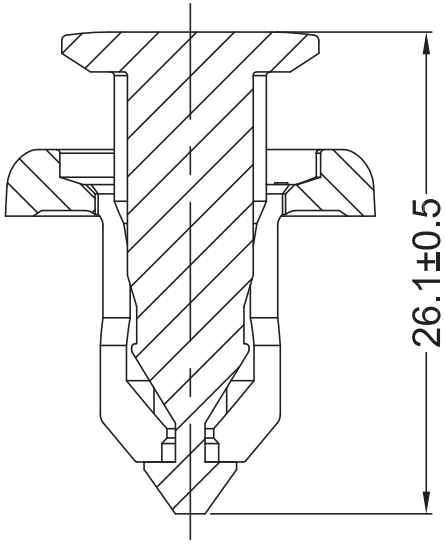

Notes:

1.Material:POM UL94HB(Body)
PP UL94HB(Pin);
2.Color:Black;
3.RoHS Compliant;
4.Hole:Ø10.0±0.08mm;
Panel Thickness:5.5-7.0mm.

	DESCRIPTION	
	MATERIAL: SEE ABOVE	
	COLOUR: SEE ABOVE	
REV.		DATE

TITLE: **PUSH LOCK RIVETS**

Modelled in RHINO 4.0

TOLLERANCES UNLESS NOTED

SEE ABOVE

FILE:

SHEET: 1 OF 1

SCALE: NTS

DwN: 26/11/20

DT: 20.11.26.9877.0.E.

DWG UNIT: MM

ChkD:

Part Number: 9877AA01

fastpoint