REVISIONS			
REV	DESCRIPTION	DATE	BY

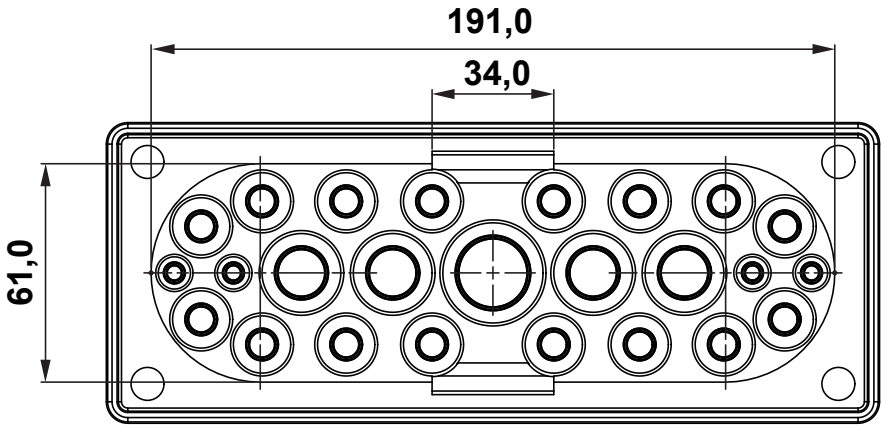

SECTION A - A

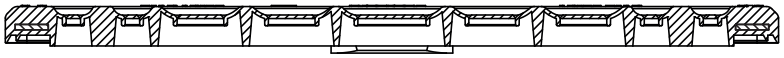

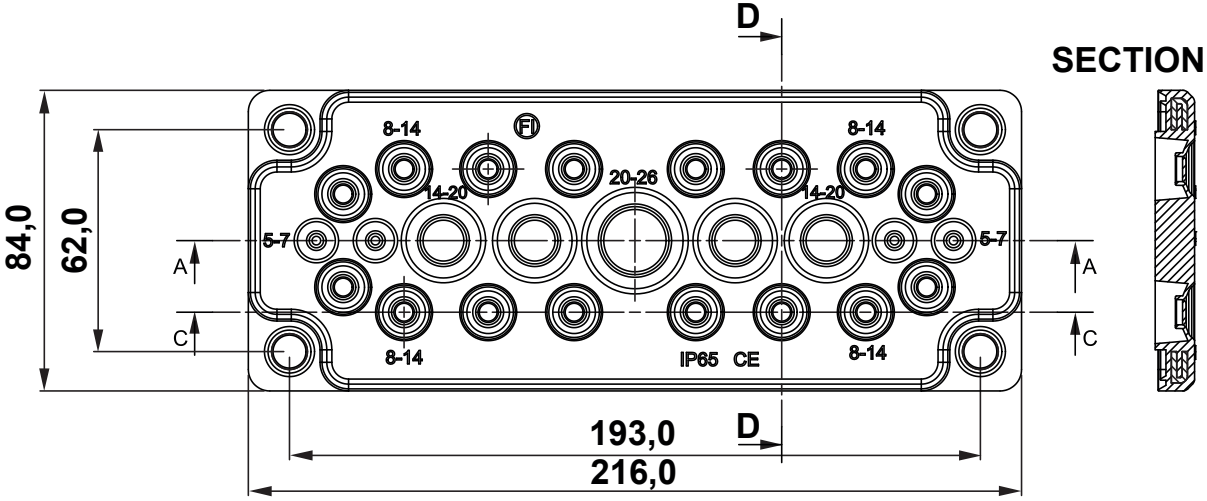

SECTION D - D

SECTION C - C

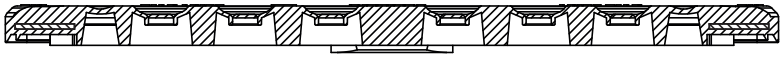

NOTES:

Working temperature: -40°C/+130°C
Measurements C-hole:
216mm x 84mm
Fastening hole: 10 mm
Fastening holes distance: 193 mm / 62 mm
Lead-throught:
1 x 20mm-26mm (IP65) / 12mm -15mm (IP55)
16 x 8mm – 14mm (IP65) / 7mm – 10mm (IP55)
4 x 14mm – 20mm (IP65) / 5mm – 10mm (IP55)
4x 5mm – 7mm (IP65)
Max 25 cables.
Halogen-free / oil splatter resistant / in and outdoor

	DESCRIPTION	
	MATERIAL: TPE – SEBS 50 Sha	
	COLOUR: GREY RAL 7035	
REV.		DATE

TITLE: **MODULAR GLAND PLATES IP 65 – PRECONFIGURATE**

DWG UNIT: MM

Modelled in RHINO 4.0 | FILE: 12/01/21 | DwN: | ChkD:

TOLLERANCES UNLESS NOTED: 2768-mK

SHEET: 1 OF 1 | DT:21.01.12.12107.E.0 | Part Number: 12107PF117035

SCALE: NTS

fastpoint