REVISIONS			
REV	DESCRIPTION	DATE	BY

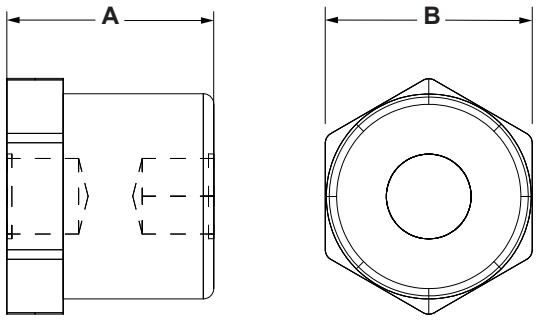

P/N	Size	A	B
22920PT04	M5	20,0	20,0
22921PT04	M5	25,0	20,0
22922PT04	M5	30,0	20,0
22923PT04	M5	40,0	20,0
22924PT04	M5	50,0	20,0
22925PT04	M6	20,0	20,0
22926PT04	M6	25,0	20,0
22927PT04	M6	30,0	20,0
22928PT04	M6	40,0	20,0
22929PT04	M6	50,0	20,0
22940PT04	M6	30,0	30,0
22941PT04	M6	35,0	30,0
22942PT04	M6	40,0	30,0
22943PT04	M6	50,0	30,0
22944PT04	M6	60,0	30,0
22945PT04	M6	65,0	30,0
22946PT04	M8	30,0	30,0
22947PT04	M8	35,0	30,0
22948PT04	M8	40,0	30,0
22949PT04	M8	50,0	30,0
22950PT04	M8	60,0	30,0
22951PT04	M8	65,0	30,0
22955PT04	M10	45,0	35,0

P/N	Size	A	B
22960PT04	M8	30,0	41,0
22961PT04	M8	35,0	41,0
22962PT04	M8	40,0	41,0
22963PT04	M8	50,0	50,0
22964PT04	M8	60,0	41,0
22965PT04	M8	70,0	41,0
22966PT04	M10	30,0	40,0
22967PT04	M10	35,0	40,0
22968PT04	M10	40,0	40,0
22969PT04	M10	50,0	40,0
22970PT04	M10	60,0	40,0
22971PT04	M10	70,0	40,0
22975PT04	M12	40,0	60,0
22976PT04	M12	50,0	60,0
22977PT04	M12	60,0	60,0
22978PT04	M12	70,0	60,0
22979PT04	M12	80,0	60,0
22985PT04	M16	40,0	60,0
22986PT04	M16	50,0	60,0
22987PT04	M16	60,0	60,0
22988PT04	M16	70,0	60,0
22989PT04	M16	80,0	60,0

Material thread Insert: Steel with Zn coating
- Dough Moulding Compound)
- Sheet Moulding Compound)

Working temperature: 40°C ~ +140°C
Colour: Red
Flammability: V0 (UL94)

fastpoint

TITLE **STANDOFF INSULATOR**			
MATERIAL SEE ABOVE		DATE 05/05/2021	
		DRAWN R.F.	
PART NUMBER SEE TABLE	DRAWING NUMBER 21.05.05.22XXX.0.E	COLOR SEE ABOVE	CHECK
SIZE A4	SCALE NTS	UNIT mm.	REV A	UNLESS OTHERWISE SPECIFIED TOLERANCE SEE ABOVE	APPROVED