DIM.	TOL.
5mm DOWN.	±0.2
5~20mm	±0.3
20~40mm	±0.4
40~60mm	±0.5
60~100mm	±0.8
100mm UP.	±1.0

REVISIONS			
REV	DESCRIPTION	DATE	BY

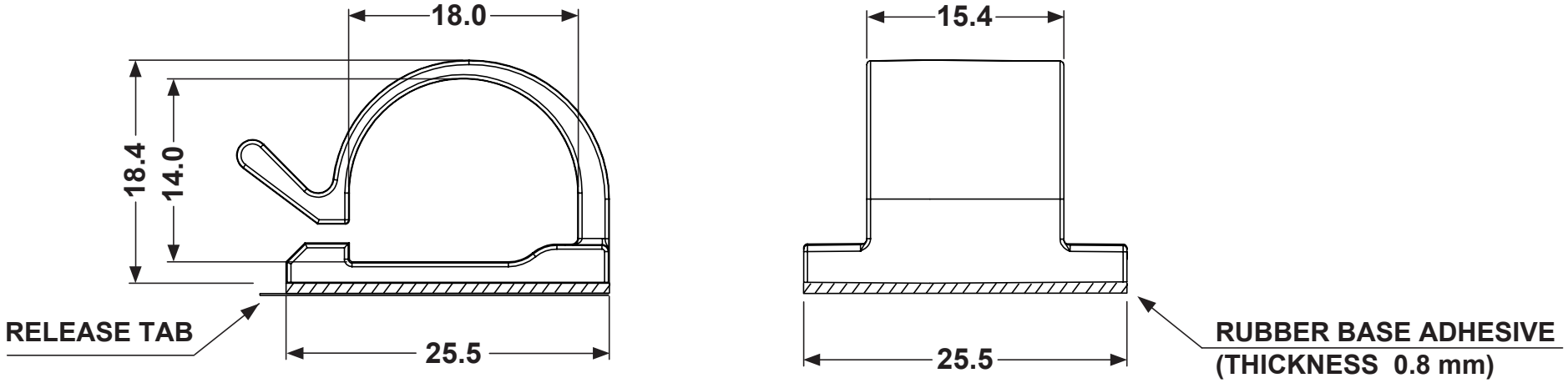

	DESCRIPTION	
	MATERIAL: PA 66 V2 (UL94)	
	COLOUR: NATURAL	
REV.		DATE

TITLE: **SELF ADHESIVE WIRE CLIPS**

DWG UNIT: MM

Modelled in RHINO 4.0

TOLLERANCES UNLESS NOTED: SEE ABOVE

FILE:

SHEET: 1 OF 1

SCALE: NTS

DwN: 28/03/18

DT: 18.03.28.0041.0.E.

ChkD:

Part Number: 0041AA00AS

fastpoint